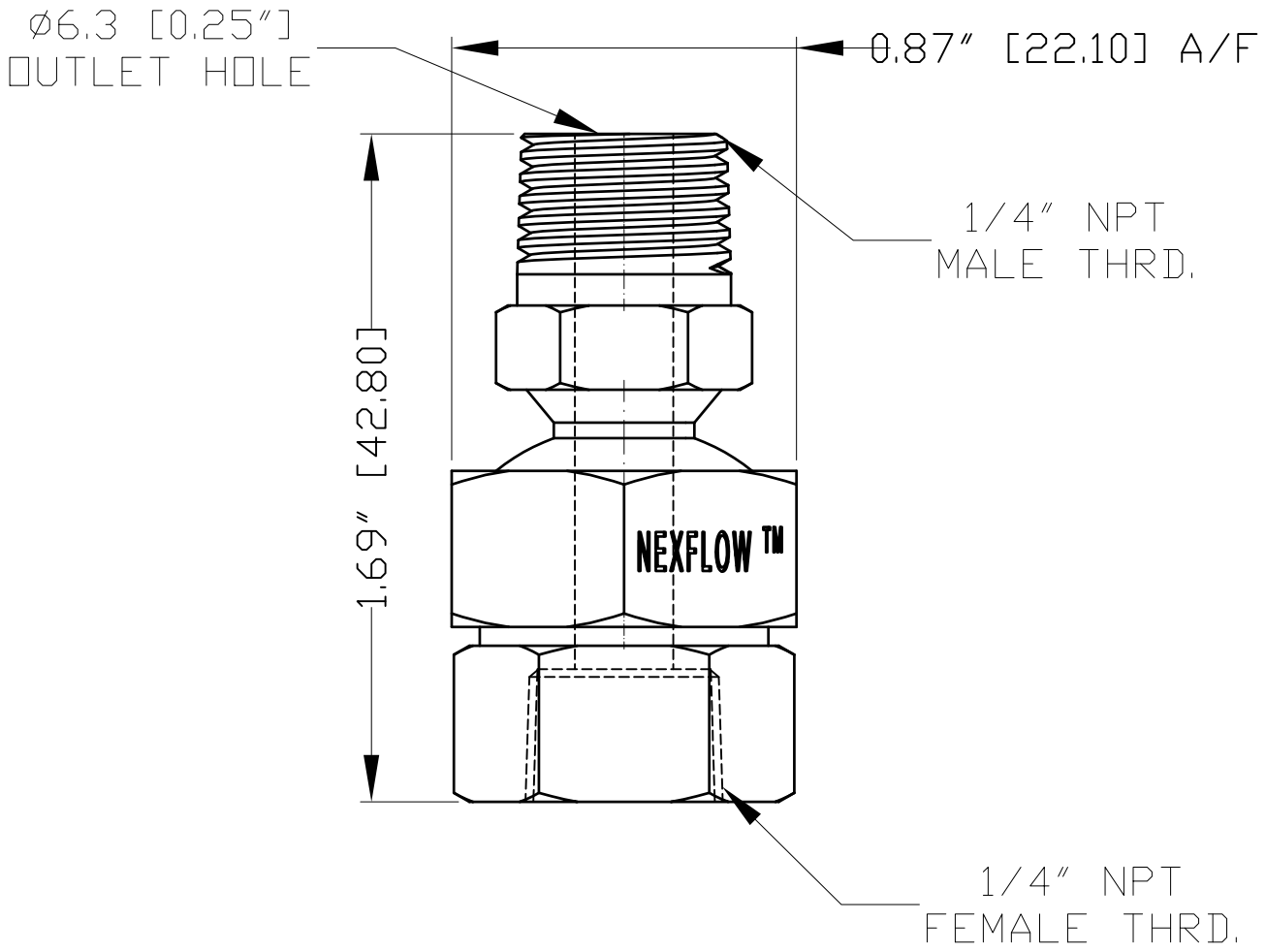

Front view

THIRD ANGLE PROJECTION

MATERIAL: SS-304

FINISH: -

REQUIREMENTS-UNLESS OTHERWISE SPECIFIED

GENERAL

1. DIMS ARE IN INCHES (MM)
2. DIMENSIONING AND TOLERANCING IN ACCORDANCE WITH ANSI Y14.5 (1982)
3. MACHINE FINISH 125 MICRO INCH RMS
4. INTERNAL RADII .015
5. BREAK SHARP CORNERS .005 TO .015

LIMITS

1. LINEAR DIMS.
   .XXX = .005
   .XX = .010
   .X = .030
2. ANGLES = ± 1/2°
3. RUNOUT .010 TIR
4. HOLES IN ACCORDANCE WITH AND 10387

CONTRACT NUMBER	–
CLIENT	–
CONTRACTOR	–
DRAWN	CHIRAG.S
DATE	30/05/2015
DESIGN	–
CHECKED	ASHISH
PROJECT	–
Q.A.	–
STRESS	–
MANUFACTURING	–
THERMAL	–
MATERIALS	–
MECHANISM	–
ELECTRICAL	–

NEX FLOW AIR PRODUCTS CORP.
10520 YONGE STREET, UNIT 35B-220, RICHMOND HILL, ON L4C 3C7
TEL.: (416) 410-1313 & FAX: (416) 410-1806 www.nex-flow.com

TITLE: 1/4" STAINLESS STEEL SWIVEL FITTING

SIZE	CAGE CODE	PART NO.	RELEASE	REV
–	–	90053	–	–

SCALE	CAD NO	SHEET
1:1		1 OF 1