| REVISIONS | | | |
|---|---|---|---|
| REV | DESCRIPTION | DATE | APPROVED |
| 1 | – | – | |

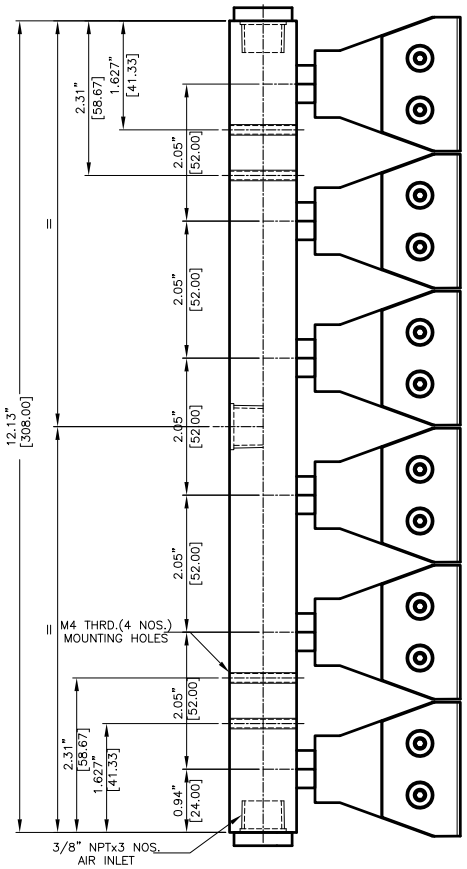


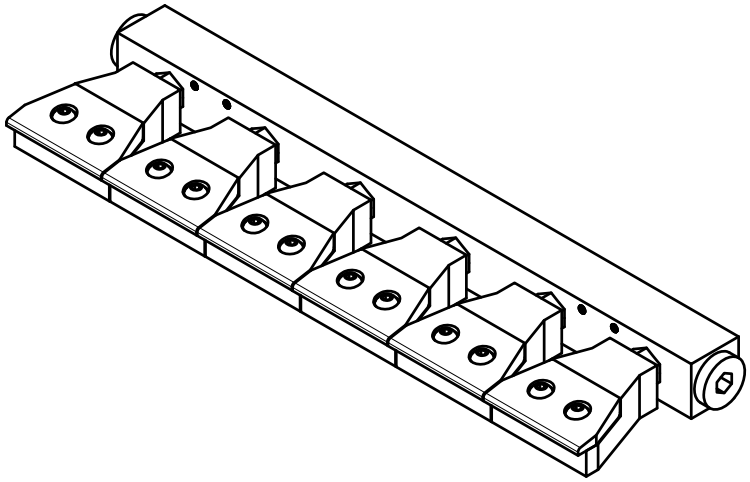

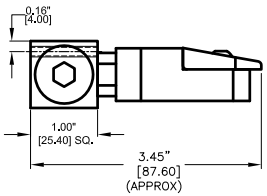


THIRD ANGLE PROJECTION

MATERIAL: AL/SS304/SS316L

FINISH: –

| NEXT ASSEMBLY | USED ON | QTY PER ASSY | PART NO |
|---|---|---|---|
| – | – | – | – |
| – | – | – | – |
| – | – | – | – |
| – | – | – | – |
| – | – | – | – |
| – | – | – | – |
| – | – | – | – |
| – | – | – | – |
| – | – | – | – |
| PART NO | – | | |

**REQUIREMENTS–UNLESS OTHERWISE SPECIFIED**

GENERAL

1. DIMS ARE IN INCHES (MM)
2. DIMENSIONING AND TOLERANCING IN ACCORDANCE WITH ANSI Y14.5 (1982)
3. MACHINE FINISH 125 MICRO INCH RMS
4. INTERNAL RADII .015
5. BREAK SHARP CORNERS .005 TO .015

LIMITS

1. LINEAR DIMS.
   .XXX = .005
   .XX = .010
   .X = .030
2. ANGLES = ± 1/2°
3. RUNOUT .010 TIR
4. HOLES IN ACCORDANCE WITH AND 10387

| | |
|---|---|
| CONTRACT NUMBER | – |
| CLIENT | – |
| CONTRACTOR | – |
| DRAWN: CHIRAG.S | DATE: 26/09/2014 |
| DESIGN: LES | CHECKED: ASHISH |
| PROJECT: – | Q.A.: – |
| STRESS: – | MANUFACTURING: – |
| THERMAL: – | MATERIALS: – |
| MECHANISM: – | ELECTRICAL: – |


NEX FLOW AIR PRODUCTS CORP.
10520 YONGE STREET, UNIT 35B–220, RICHMOND HILL, ON L4C 3C7
TEL: (416) 410–1313 & FAX: (416) 410–1806 www.nex–flow.com


TITLE: OUTLINE DRAWING OF 6 PORT STANDARD FLOW MANIFOLD WITH 47011 FLATJET

| SIZE | CAGE CODE | DWG NO | RELEASE | REV |
|---|---|---|---|---|
| – | – | 46006+47011 | – | – |

| SCALE | CAD NO | SHEET | OF |
|---|---|---|---|
| 1:1 | MAN–6+FJ | 1 | 1 |